96-CH CERESTIM PATIENT CABLE

PN-8603

INVESTIGATIONAL DEVICE

Limited by Federal Law to Investigational Use Only

Blackrock Microsystems, LLC

630 Komas Drive • Suite 200
Salt Lake City • UT 84108

T: +1 (801) 582-5533
www.blackrockmicro.com
support@blackrockmicro.com

Table of Contents

1 Patient Cable with Filament Film NeuroPort® Connector Overview 4

2 Patient Care 5

3 Setup and Instructions for using Patient Cable 5

4 Cleaning the Patient Cable Assembly 7

5 Warranty 9

5.1Return Merchandise Authorization 9

Contraindications, Warnings, and Cautions

Contraindications

- The Filament Film NeuroPort® Connector should not be used without the Cerestim Patient Cable provided by Blackrock Microsystems.
- The Cerestim Patient Cable stimulation connector should only be used with Blackrock Stimulation equipment.

Warnings

WARNING
Do not touch any exposed electrical conductors when the Filament Film NeuroPort® Connector is attached to Pedestal on subject's head as this may result in inducing electric charge to the neural tissue. Irreversible damage may occur.

- The patient/subject should not attempt to remove the Cerestim Patient Cable themselves.
- Use caution when connecting and disconnecting the Cerestim and the Cerestim Patient Cable to minimize the risk of the cable being accidently pulled or tugged.
- The Cerestim Patient Cable should not be bound to, or organized with any other cables which allow the Cerestim Patient Cable to lay parallel to them.
- Do not use the Cerestim Patient Cable in the presence of flammable anesthetic agents or any other reagents.
- Avoid strong static discharges from sources like television or computer monitors because it can damage the electrical components of the system.
- Keep the Cerestim Patient Cable away from liquids. Contact with water, shower spray, or wet surfaces can lead to the patient receiving an electrical shock.
- Connection of external instruments to the Cerestim Patient Cable may compromise electrical safety.
- Always use antistatic or electro static discharge (ESD) safe gloves when handling the Filament Film NeuroPort® Connector of the Cerestim Patient Cable.

Cautions

- Investigational Device: Limited by Federal Law to Investigational Use Only.
- Read this entire manual prior to using the device.

Cerestim Patient Cable Symbols

Attention: Consult Accompanying Documents

Specifications

Model Name	96-ch Cerestim Patient Cable
Mode of Operation	Continuous
Water Ingress Protection	Ordinary equipment, not fluid resistant
Operating Environment	10˚C to 40˚C, 5 to 50% R.H. (non-condensing)
Storage Environment	10˚C to 40˚C, 5 to 20% R.H. (non-condensing)

1 Cerestim Patient Cable Overview and Intended Use

The Cerestim Patient Cable is designed to mate with Blackrock Pedestal. It is intended to stimulate using the Blackrock Cerestim Stimulator to the Land Grid Array (LGA) of the Pedestal assembly.

This document provides the instructions for use for Cerestim Patient Cable. Figure 1 shows a Blackrock Cerestim Patient Cable with a Filament Film NeuroPort® Connector. Figure 2 shows an isometric view of the Filament Film NeuroPort® Connector.

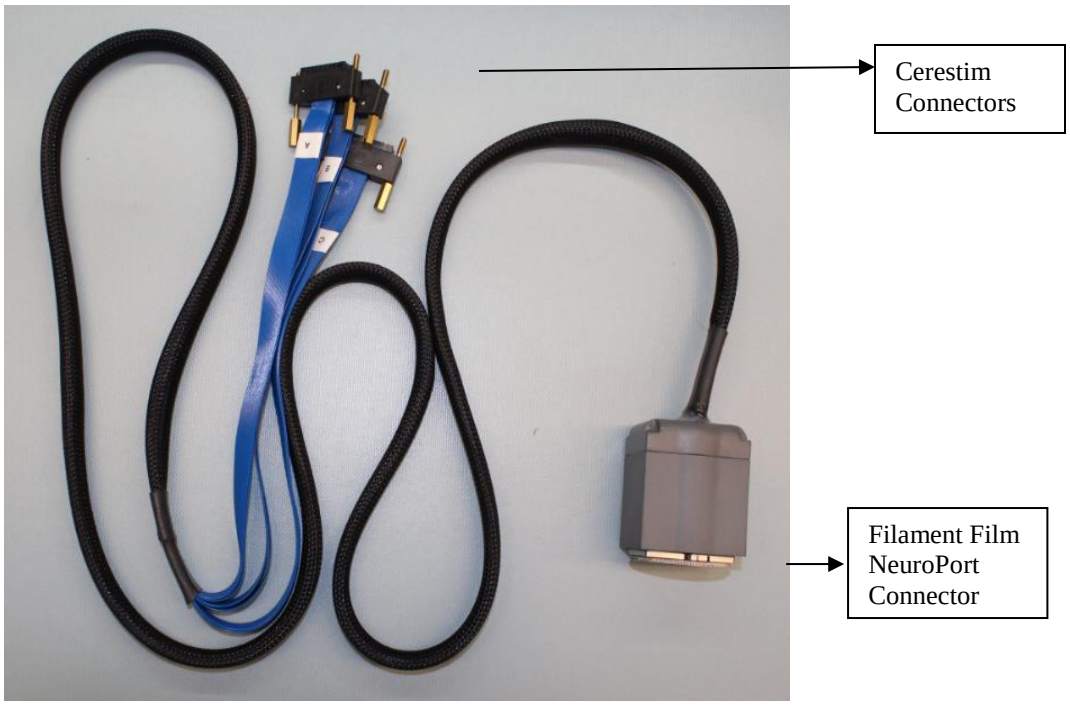

Figure 1: Top View of Cerestim Patient Cable with Filament Film NeuroPort® Connector

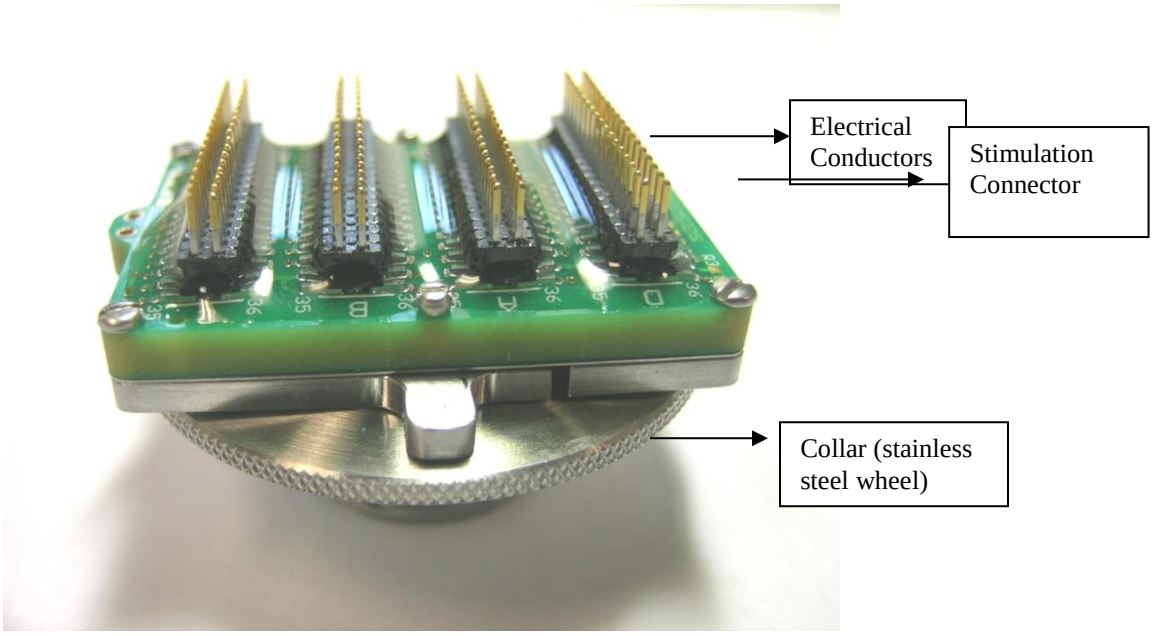

Figure 2: Isometric View of Filament Film NeuroPort Connector

2 Patient Care

Check all of the connections between the Cerestim Patient Cable, and the Front End Amplifier. Place the amplifier cable loosely next to the patient in preparation for connection.

WARNING
Use caution when placing the Cerestim and the Cerestim Patient Cable to minimize the risk of the cable being accidently pulled or tugged.

Ensure that there is adequate slack in the cable, that it is clearly visible. Verify that the amplifier is firmly and securely mounted.

3 Setup and Instructions for using Cerestim Patient Cable

Before mating the Cerestim Patient Cable to the pedestal, equalize the electrostatic potential of the patient and the equipment.

1) Wear antistatic or ESD safe sterile gloves using sterile technique.
2) Touch the collar (stainless steel wheel as shown in Figure 2) of the Cerestim Patient Cable to the skin of the patient. This will prevent electrostatic discharge into the pedestal contacts.

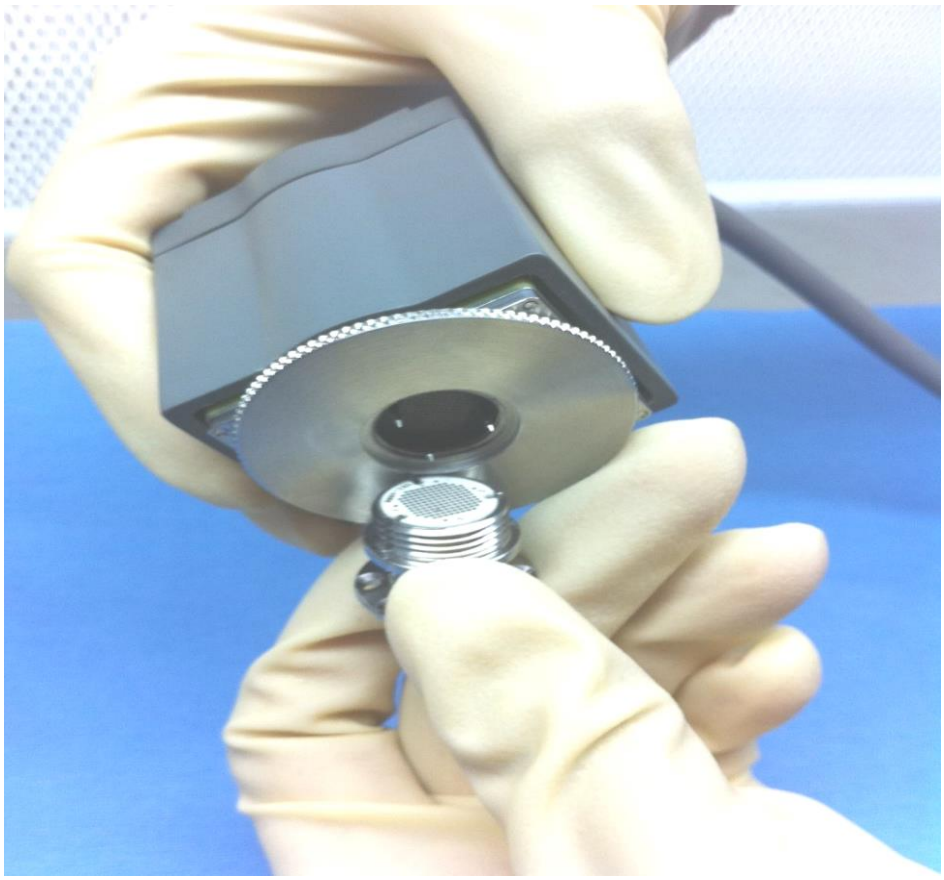

Figure 3: Aligning Pedestal and the Filament Film NeuroPort Connector

The Filament Film NeuroPort Connector is designed to mate to the pedestal without requiring much force or torque on the pedestal. To correctly mate the Filament Film NeuroPort Connector this way, two hands must be used.

3) Line up the alignment pins on the connector and the pedestal as shown in Figure 3; push them together until the collar screw makes contact.

4) While holding the patient cable with one hand, turn the collar of the Filament Film NeuroPort® Connector with the other hand until the collar screw engages. Continue to screw on the Filament Film NeuroPort® Connector while holding the head stage assembly to prevent forces from being applied to the pedestal as shown in Figure 4.

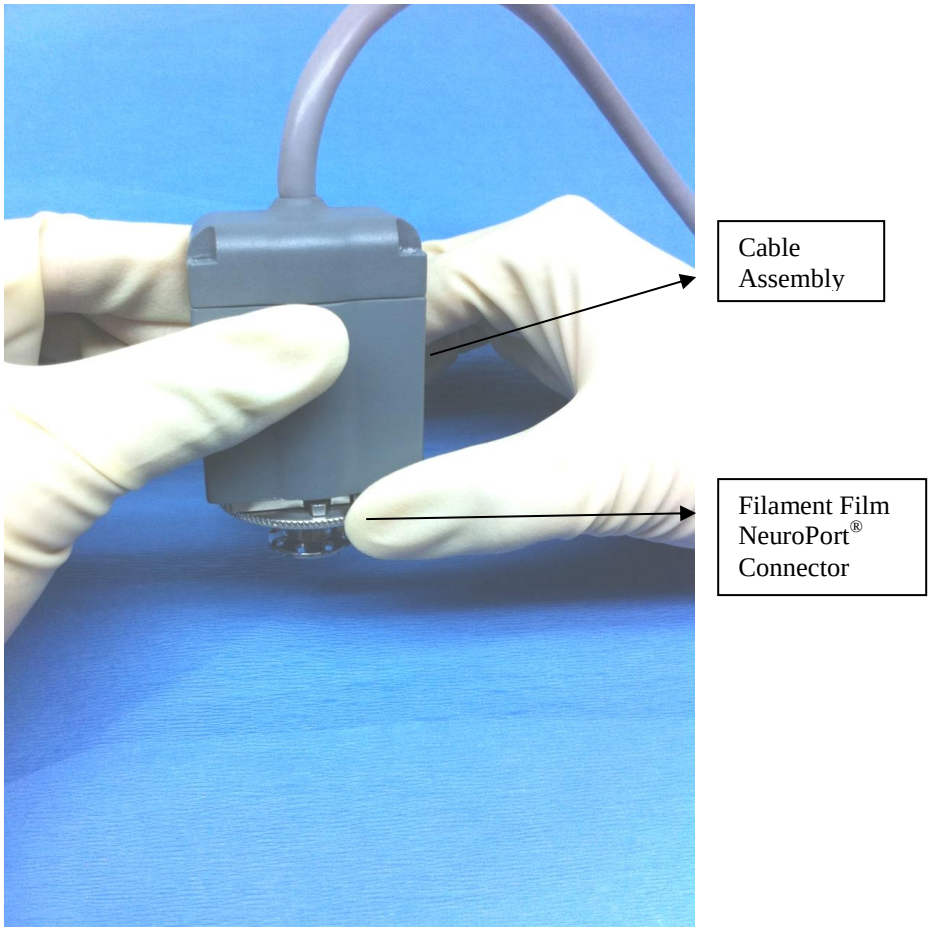

Figure 4: Pedestal-Connector Mating

4 Cleaning Instructions for the Cerestim Patient Cable

The Cerestim Patient Cable Assembly must be gently cleaned using Isopropyl alcohol (IPA) wipes and use pressurized air to blow dry. This includes the pedestal end of the cable shown in the Figure 5. DO NOT immerse the pedestal end or the cable assembly in water or cleaning solutions. The collar assembly must be cleaned, but use caution not to pierce the membrane inside of the Filament Film NeuroPort® Connector. Figure 5 shows the bottom view of the Filament Film NeuroPort Connector and the filament film membrane.

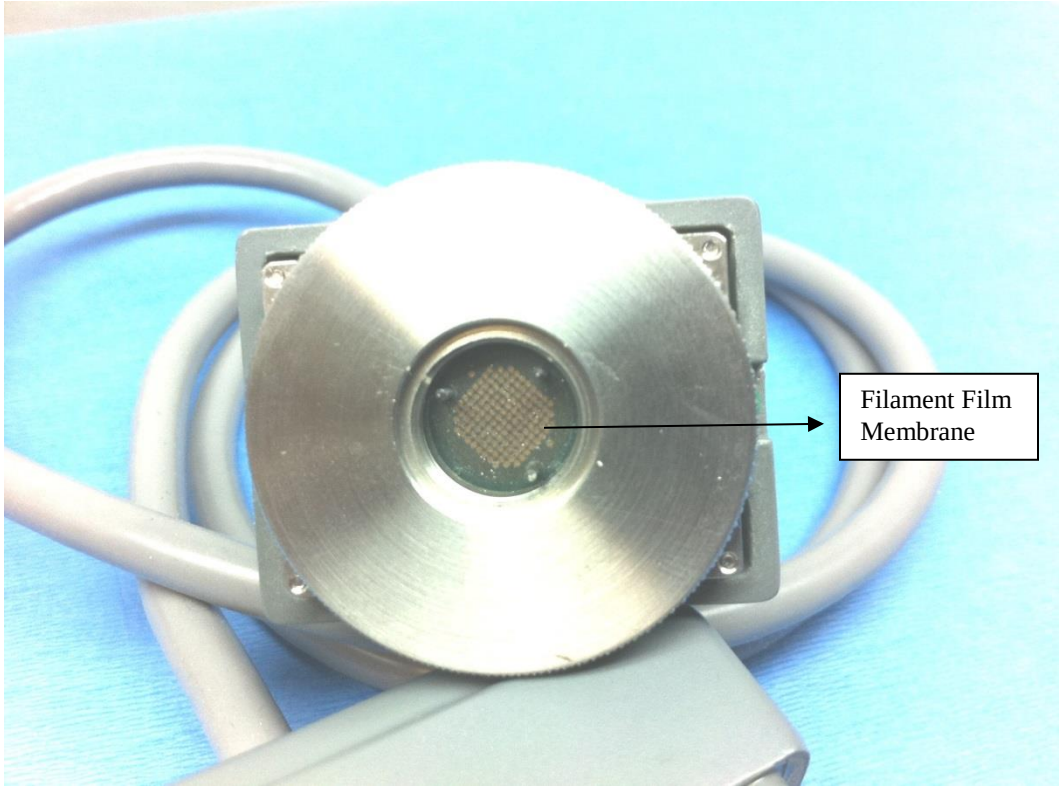

Figure 5: Bottom View of the Filament Film NeuroPort Connector showing the filament film membrane.

5 Storage

When the not in use, the Cerestim Patient Cable must be stored in dry and controlled environment at temperatures between 10˚C to 40˚C (50˚F to 104˚F) and the environment must be non-condensing.

Be sure not to bend any electrical conductor pins on the Cerestim Patient Cable or on the Filament Film NeuroPort Connector. It is recommended that you save the original packaging of this Cerestim Patient Cable and use it for storage.

6 Safety

If in an unlikely event the top cap assembly is dislodged from the Filament Film NeuroPort Connector assembly, caution must be exercised to carefully unscrew the connector from the implanted pedestal.

WARNING
DO NOT touch any exposed electrical conductors when the Filament Film NeuroPort® Connector is attached to Pedestal on subject's head as this may result in inducing electric charge to the neural tissue. Irreversible damage may occur.

After unscrewing the Filament Film NeuroPort Connector from the implanted pedestal, carefully observe all the components on the Cerestim Patient Cable for any visual damage.

Contact BlackRock personnel for assistance on the Patient Cable and act as per the recommendation.

7 Warranty

Blackrock Microsystems warrants that its products are free from defects in materials and manufacturing for a period of one year from the date of shipment. Blackrock will, at its option, repair or replace any product that does not comply with this warranty. This warranty is voided by:

1. Any modification or attempted modification to the product done by anyone other than an authorized Blackrock employee
2. Any abuse, negligent handling or misapplication of the product.

This constitutes the sole warranty made by Blackrock, There are no other warranties, expressed or implied, which extend beyond those described herein or to anyone other than the original purchaser, including the implied warranties of merchantability and fitness for a particular purpose. In no event shall Blackrock Microsystems, be liable for any incidental or consequential damages, or for the infringement of any patent rights or third party rights due to the use of its products.

7.1 Return Merchandise Authorization

In the unlikely event that your adapter needs to be returned to Blackrock for repair or maintenance, do not send any equipment back without a Return Merchandise Authorization Number. An RMA number will be issued to you by a Blackrock representative. If you need to obtain an RMA number, you may contact a product support representative at (801) 582-5533 or toll free at (866) 806-3692.

Once an RMA number has been issued, it is important to safely pack the returned item for shipping back to Blackrock. It is preferred that you save the original boxes and packing materials that your system arrived in for return shipment. Please address the package as follows:

Blackrock Microsystems
ATTN: RMA#
630 Komas Drive, Suite 200
Salt Lake City, UT 84108 USA
Tel: +1 (801) 582-5533