16-Channel
Headstage Omnetics IFU

PN 6422/ PN 9374

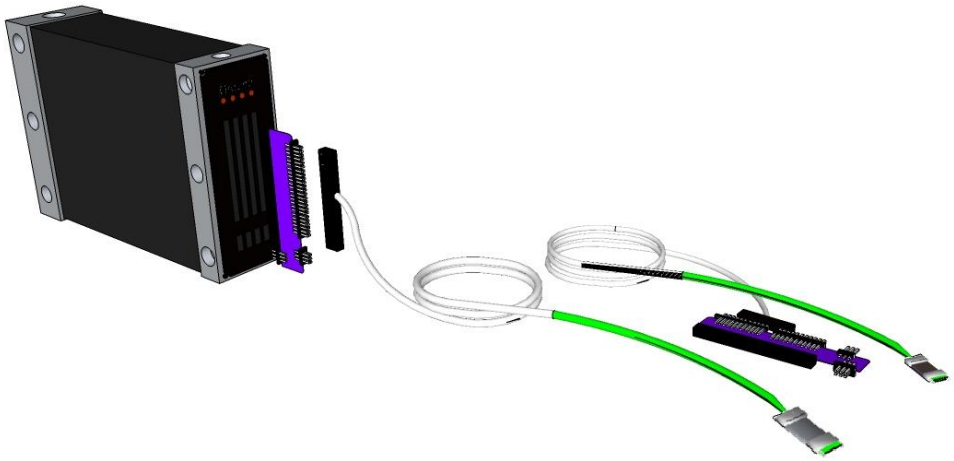

Blackrock Microsystems, LLC

630 Komas Drive • Suite 200
Salt Lake City • UT 84108

T: +1 (801) 582-5533
www.blackrockmicro.com
support@blackrockmicro.com

©2015 Blackrock Microsystems, LLC

1 Introduction

Blackrock Microsystems offers a wide range of headstages for recording distortion-free spikes and field potentials from high impedance microelectrodes. The headstage provides an isolated low-impedance output that guarantees signal integrity, minimizes noise pickup by cables and ensures maximum common-mode noise rejection by the Cerebus system front-end amplifier. The 16-Channel Omnetics Headstage is available with 3ft (PN-6422) and 6ft (PN-9374) cables.

2 System Components

PN-6424	CHA 2x16
PN-6422/ PN-9374	16-Channel Omnetics Headstage

3 Intended Use

This assembly acts like an impedance transformer used for neural signal transmission on animal research/applications.

4 Instruction for Use

The 16-CH Omnetics Headstage assembly includes one CHA-2x16 Board, 16-CH Omnetics headstage.

To put the assembly together:

4.1 Turn off the power of the Front-end Amplifier power supply.

4.2 Plug the black female connector from the voltage regulator to the upper connector of CHA-2x16 Board.

4.3 Plug the CHA-2x16 Board directly to one of the Banks on the Front-end Amplifier.

4.4 Plug the headstage to the electrode connector.
Caution: Note the orientation, the date code on the two connectors should be on the same side.

4.5 Turn on the power of the Front-end Amplifier power supply for recording.
**After recording, turn off the power supply before any disconnection.

©2015 Blackrock Microsystems, LLC

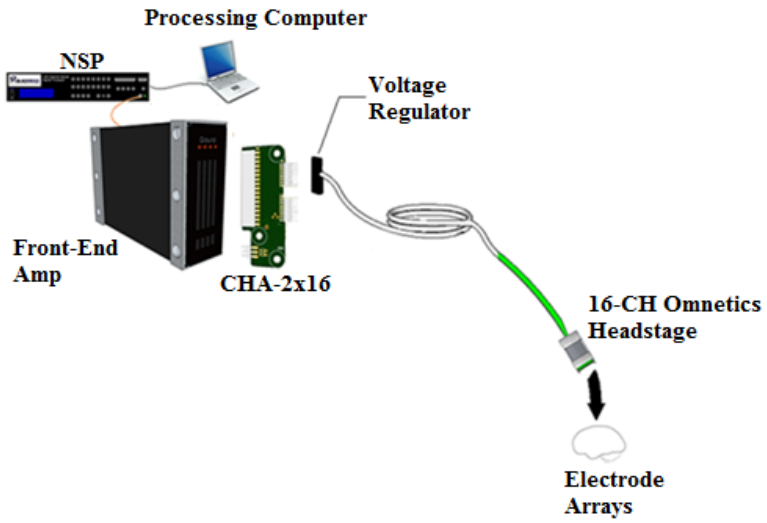

Figure 4-1: Assembly Set-Up

5 Hardware

5.1 Blackrock CHA-2x16 Board Pin-out

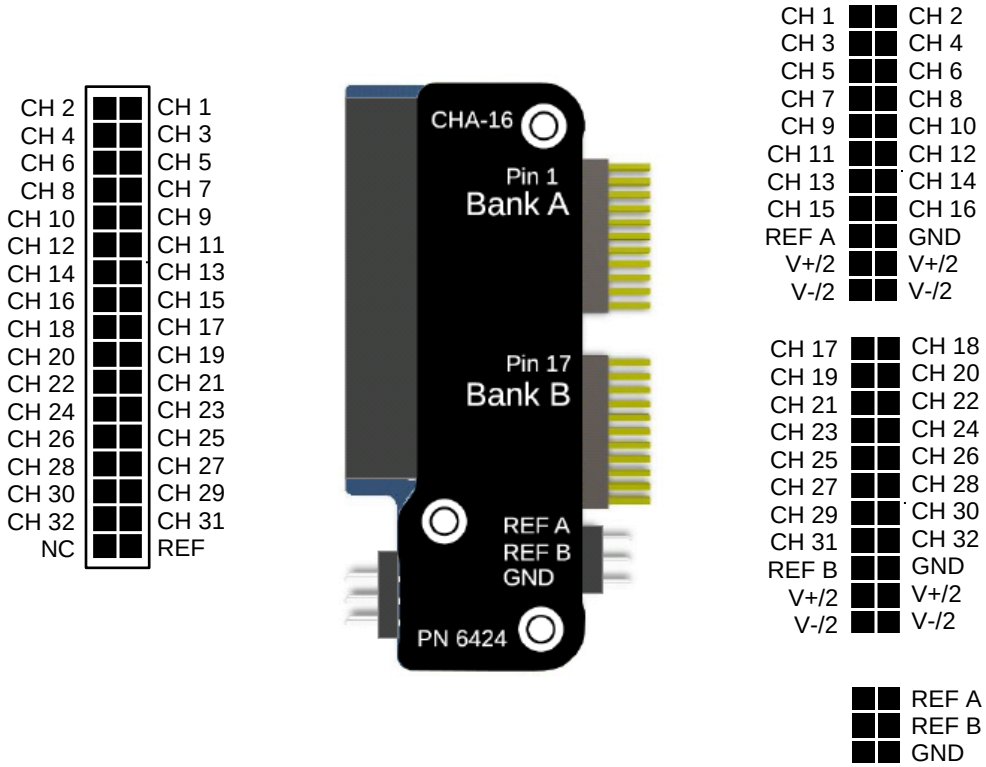

Figure 5-1: CHA-16 Board Pin-Out
*** Viewed looking into the connectors**

*The jumper on the CHA-2x 16 board provides connections between the input reference (on the right) and the system reference (on the left).

©2015 Blackrock Microsystems, LLC

5.2 Blackrock 16-CH Omnetics Headstage Pin-out

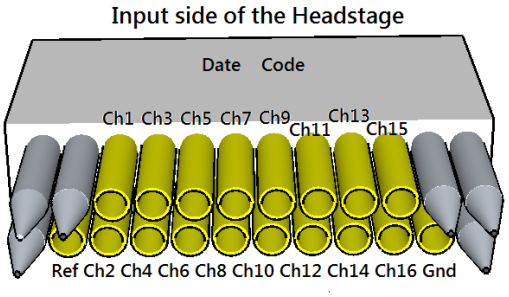

Figure 5-2: 16-CH Omnetics Headstage Pin-Out (Input side)

6 Warning

This assembly can only be used for animal research/applications.

7 Warranty

Blackrock Microsystems, LLC. warrants that its products are free from defects in materials and manufacturing for a period of one year from the date of shipment. Blackrock will, at its option, repair or replace any product that does not comply with this warranty. This warranty is voided by:

1. Any modification or attempted modification to the product done by anyone other than an authorized Blackrock employee
2. Any abuse, negligent handling or misapplication of the product.

This constitutes the sole warranty made by Blackrock, LLC. There are no other warranties, expressed or implied, which extend beyond those described herein or to anyone other than the original purchaser, including the implied warranties of merchantability and fitness for a particular purpose. In no event shall Blackrock Microsystems, LLC. be liable for any incidental or consequential damages, or for the infringement of any patent rights or third party rights due to the use of its products.

7.1 Return Merchandise Authorization (RMA)

In the unlikely event that your adaptor needs to be returned to Blackrock for repair or maintenance, do not send any equipment back without a Return Merchandise Authorization Number. An RMA number will be issued to you by a Blackrock representative. If you need to obtain an RMA number, you may contact a product support representative at (801) 582-5533 or toll free at (866) 806-3692.

Once an RMA number has been issued, it is important to safely pack the returned item for shipping back to Blackrock. It is preferred that you save the original boxes and packing

©2015 Blackrock Microsystems, LLC

materials that your system arrived in for return shipment. Please address the package as follows:

Blackrock Microsystems, LLC
ATTN: RMA#
630 Komas Dr., Suite 200
Salt Lake City, UT 84108 USA
Tel: +1(801) 582-5533

©2015 Blackrock Microsystems, LLC